REPORT DOCUMENTATION PAGE

Form Approved
OMB No. 0704-0188

Public reporting burden for this collection of information is estimated to average 1 hour per response, including the time for reviewing instructions, searching existing data sources, gathering and maintaining the data needed, and completing and reviewing this collection of information. Send comments regarding this burden estimate or any other aspect of this collection of information, including suggestions for reducing this burden to Department of Defense, Washington Headquarters Services, Directorate for Information Operations and Reports (0704-0188), 1215 Jefferson Davis Highway, Suite 1204, Arlington, VA 22202-4302. Respondents should be aware that notwithstanding any other provision of law, no person shall be subject to any penalty for failing to comply with a collection of information if it does not display a currently valid OMB control number. PLEASE DO NOT RETURN YOUR FORM TO THE ABOVE ADDRESS.

1. REPORT DATE *(DD-MM-YYYY)*

2. REPORT TYPE Technical Paper

3. DATES COVERED *(From - To)*

4. TITLE AND SUBTITLE

Please see attached

5a. CONTRACT NUMBER

5b. GRANT NUMBER

5c. PROGRAM ELEMENT NUMBER

6. AUTHOR(S)

5d. PROJECT NUMBER 1011

5e. TASK NUMBER 00VA

5f. WORK UNIT NUMBER 346247

7. PERFORMING ORGANIZATION NAME(S) AND ADDRESS(ES)

Thiokol

8. PERFORMING ORGANIZATION REPORT

9. SPONSORING / MONITORING AGENCY NAME(S) AND ADDRESS(ES)

Air Force Research Laboratory (AFMC)
AFRL/PRS
5 Pollux Drive
Edwards AFB CA 93524-7048

10. SPONSOR/MONITOR'S ACRONYM(S)

11. SPONSOR/MONITOR'S NUMBER(S)

Please see attached

12. DISTRIBUTION / AVAILABILITY STATEMENT

Approved for public release; distribution unlimited.

13. SUPPLEMENTARY NOTES

14. ABSTRACT

20030205 287

15. SUBJECT TERMS

16. SECURITY CLASSIFICATION OF:

a. REPORT	b. ABSTRACT	c. THIS PAGE	17. LIMITATION OF ABSTRACT	18. NUMBER OF PAGES	19a. NAME OF RESPONSIBLE PERSON
Unclassified	Unclassified	Unclassified	A		Leilani Richardson

19b. TELEPHONE NUMBER *(include area code)*
(661) 275-5015

MEMORANDUM FOR PRR (Contractor/In-House Publication)

FROM: PROI (TI) (STINFO) 12 Sep 2000

SUBJECT: Authorization for Release of Technical Information, Control Number: **AFRL-PR-ED-TP-2000-177**
D. Lester, S. Wassom (Thiokol), J. Pearson (SRS Technologies), M. Holmes, "Solar Thermal Propulsion IHPRPT Demonstration Program"

AIAA Space 2000 Conference **(Statement A)**
(Long Beach, CA, 19-21 Sep 00) **(Submission Deadline: ASAP)**

1. This request has been reviewed by the Foreign Disclosure Office for: a.) appropriateness of distribution statement, b.) military/national critical technology, c.) export controls or distribution restrictions, d.) appropriateness for release to a foreign nation, and e.) technical sensitivity and/or economic sensitivity.
Comments:____

Signature ________________________ Date ____________

2. This request has been reviewed by the Public Affairs Office for: a.) appropriateness for public release and/or b) possible higher headquarters review.
Comments: ____

Signature ________________________ Date ____________

3. This request has been reviewed by the STINFO for: a.) changes if approved as amended, b.) appropriateness of distribution statement, c.) military/national critical technology, d.) economic sensitivity, e.) parallel review completed if required, and f.) format and completion of meeting clearance form if required
Comments:____

Signature ________________________ Date ____________

4. This request has been reviewed by PR for: a.) technical accuracy, b.) appropriateness for audience, c.) appropriateness of distribution statement, d.) technical sensitivity and economic sensitivity, e.) military/ national critical technology, and f.) data rights and patentability
Comments:____

APPROVED/APPROVED AS AMENDED/DISAPPROVED

____
LAWRENCE P. QUINN DATE
Technical Advisor
Rocket Propulsion Division

AIAA-2000-5109

Solar Thermal Propulsion IHPRPT Demonstration Program *

Dean M. Lester, Steven R. Wassom
Thiokol Propulsion
Brigham City, UT

James C. Pearson
SRS Technologies
500 Discovery Drive
Huntsville, AL

Michael R. Holmes
Air Force Research Laboratory
4 Draco Drive (PRRS)
Edwards AFB, CA

DISTRIBUTION STATEMENT A
Approved for Public Release
Distribution Unlimited

D reg comments in red

Abstract

ABSTRACT

Spacecraft powered by solar thermal propulsion engines will be able to provide the velocity change required to economically maneuver large payloads from one orbit to another or to perform interplanetary missions. This innovative concept, when applied, will double the efficiency of currently used LH2 – LO2 chemical upper stages. Solar thermal propulsion uses the sun's energy to heat a low molecular weight working fluid such as hydrogen to very high temperatures (3,000 K). The stored thermal energy is then converted to kinetic energy as the working fluid exits a diverging nozzle.

Spell out Acronyms on 1st use

Under IHPRPT funding, The Air Force Research Lab (AFRL) has ~~sponsored~~ the team of Thiokol Propulsion and SRS Technologies to demonstrate the technological readiness and performance of an inflatable solar thermal propulsion system. This paper will address the current status of this program, which includes the following accomplishments:

- Component trade studies completed for struts, torus, lenticular
- Rapid prototyping and hardware-in-the-loop system installed and verified
- Inflation control system designed, fabricated, and tested in both ambient and space environments
- Conceptual design and 3-D dynamic model made of focus control system
- Sun sensors for focus control system fabricated and tested
- Integrated system fabricated and deployed in space environment
- Modal testing of inflatable concentrator completed in ambient conditions

The program will culminate in a full-up integrated proof-of-concept ground test. This will demonstrate that the technology is ready for development of the flight hardware for the AFRL Solar Orbital Transfer Vehicle (SOTV) ~~program~~.

stet

INTRODUCTION

Solar Thermal Propulsion (STP) is an innovative concept that uses the sun's energy to heat a low molecular weight fuel such as hydrogen. The thermal energy stored in the hot fuel is then converted to kinetic energy by expansion through a diverging nozzle. This results in a high efficiency (800 – 1,000 sec Isp) low thrust (2-10 lbf) propulsion system[1]. Spacecraft powered using STP systems have been proposed for orbital transfer, interplanetary, and other delta velocity missions.[2]

propelled?

Figure 1 shows a conceptual view of a solar thermal rocket on orbit, featuring inflatable solar concentrators supported by inflated and rigidized struts.[3] These concentrating mirrors are elliptical because geometrically they are actually opposing off-axis "slices" of a paraboloid whose axis points at the sun and whose focal point corresponds to the location of the hydrogen engine (Figure 2).

---

* Approved for public release; distribution unlimited.

© 2000 Thiokol Propulsion, a division of Cordant Technologies Inc.

I know that government papers have the "not subject to copyright protection" comment. I don't know what happens with a gov co-author - talk to Stinfo.

In my experience, if a paper is coauthored by gov't + contractor, there is no copyright protection
D. Aragon

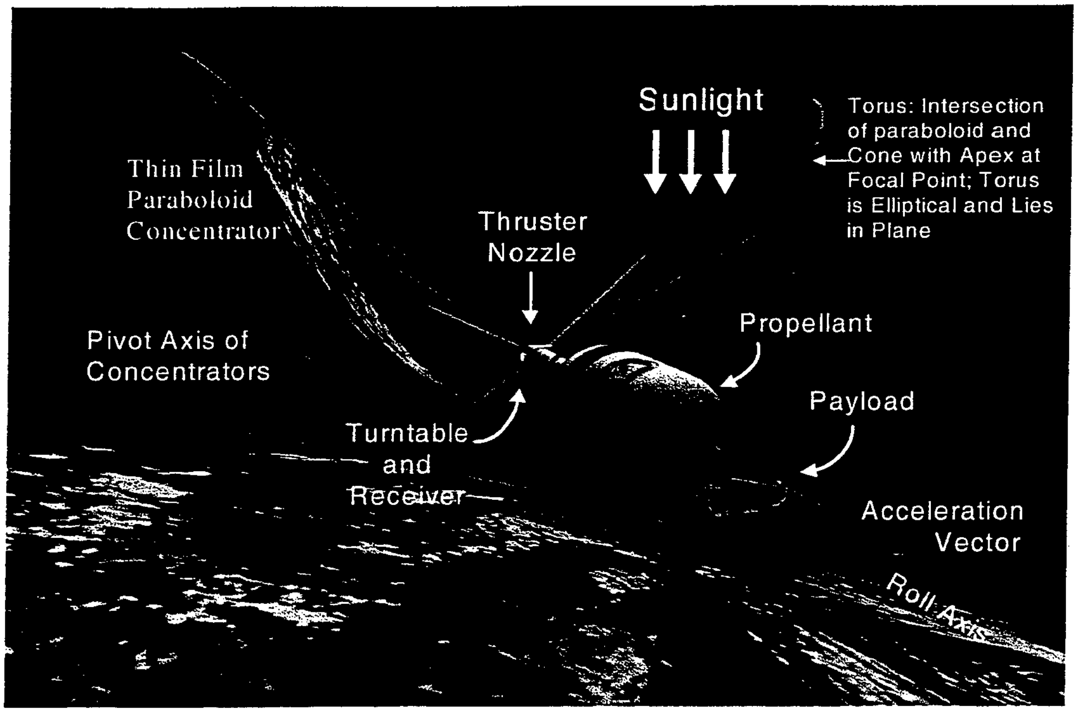
Sunlight
Torus: Intersection of paraboloid and Cone with Apex at Focal Point; Torus is Elliptical and Lies in Plane
Thin Film Paraboloid Concentrator
Thruster Nozzle
Propellant
Pivot Axis of Concentrators
Payload
Turntable and ~~Receiver~~
Acceleration Vector
Roll Axis

Figure 1. AFRL View of a Solar Thermal Propulsion System

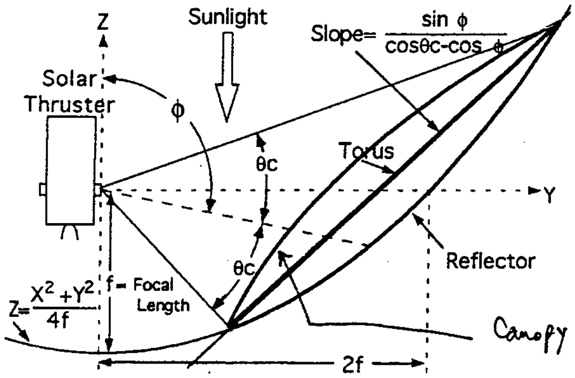
Z
Sunlight
Slope= $\frac{\sin\phi}{\cos\theta c-\cos\phi}$
Solar Thruster
ϕ
θc
Torus
Y
Reflector
θc
$Z=\frac{X^2+Y^2}{4f}$
f= Focal Length
2f

Canopy (see comment @ top of page 4

Figure 2. Geometry Definition for Solar Concentrator

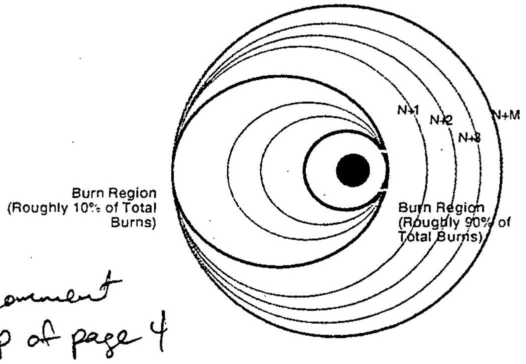
N+1
N+2
N+3
N+M
Burn Region (Roughly 10% of Total Burns)
Burn Region (Roughly 90% of Total Burns)

Figure 3. Solar Thermal Propulsion Orbit Transfer

define 1st

already defined

To accomplish an orbital transfer, the solar rocket and its payload are lifted into a low earth orbit (LEO) using conventional chemical boosters. A typical LEO -to-GEO payload transfer requires numerous "burns" of the ~~solar orbital transfer vehicle~~ (SOTV). Short burns at perigee are used to raise the apogee of the orbit. Once the appropriate apogee is reached, multiple burns at apogee raise the perigee. This orbit transfer can be accomplished in 30 days ~~and~~ 200 to 300 burns.[4] Figure 3 shows a graphical representation of a solar thermal propulsion LEO-to-GEO orbit transfer.

or use acronym only (not both)

using

New paragraph

Precision membrane solar concentrators are an enabling technology for STP systems. Concentration of large amounts of solar energy requires large surface area collectors. Inflatable solar concentrators can be packaged more efficiently than rigid concentrators of equal power. Figure 4 shows a volumetric comparison for a solar orbital transfer vehicle using equal power inflatable and rigid concentrators. As can be seen from this illustration, the inflatable concentrators can be packaged easily within available launch vehicle fairings, whereas the rigid concentrator requires a much larger and more expensive launch vehicle to fly the same payload.

This is redundant with Fig caption

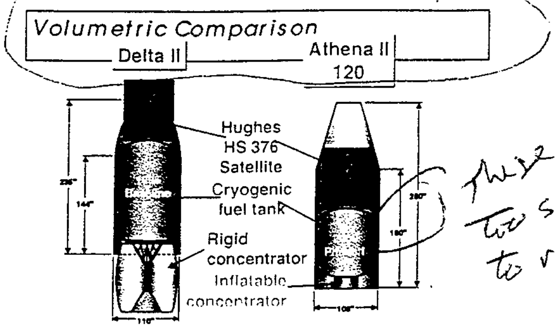

These are too small to read

lower case

Figure 4. Inflatable Vs. Rigid Concentrator Volumetric Comparison

COMPONENT TRADE STUDIES

The membrane concentrator system is composed of several subsystems: the torus / catenaries, membrane concentrator, inflated / rigidized support struts, and fine focusing and sun tracking hardware. These systems work together to provide power to the absorber engine.

The sizing of the membrane concentrator began with a five-kilowatt absorber /engine power requirement. Engineering data was available on the concentration efficiency of an elliptical 2 X 3 meter test-scale concentrator (TSC). From these data it was determined that a 4 X 6 meter flight-scale concentrator (FSC) had the potential to meet the power requirements. Using this size of a concentrator for the baseline, a design matrix was constructed. This matrix considered power, weight, and stowage volume.

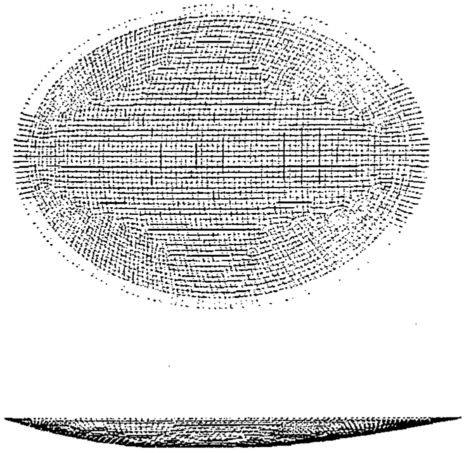

Figure 5. FSC ALGOR Model

The FSC sizing and design proceeded with the creation of an ALGOR finite-element model (FEM) of a 4 X 6 meter class concentrator. Figure 5 shows a representation of the ALGOR model. This model was constructed of 3893 Type 6 elements with 204 catenary attachment points. The baseline parameters used in the model include an average on-sun temperature of 230° F, an average film thickness of 0.001 inches, an inflation pressure of 0.013 inches of water, and a modulus of 290 ksi. The film membrane FEM was used to evaluate the displacement variation induced in the film with applied pressure. The catenaries were initially tensioned, causing the concentrator to be pulled through the design surface shape. Then pressure was slowly applied to the inside surface from 0.003 inches of water to 0.013 inches of water. The pressure caused the concentrator to be pushed back toward the design surface, and in this way the inflated shape of the concentrator was modeled.

what is a "type 6" element ?

while concentrate components were ls the eleme were no explaine

CP1 polyimide, a space rated film developed by NASA LaRC and named as a NASA invention of the year for 1999, has been selected to form the torus, canopy, and reflector structures. The reflector film will be coated with vapor-deposited aluminum. The catenaries will be made from UV-inhibited silicone. The canopy and reflector will be joined to form the lenticular using solvent welding techniques. The aperture size of the concentrator will be 4.17 meters. The focal length will be 2.05 meters measured from the vertex of the paraboloid to the focal point. This off-axis parabolic concentrator will have a tilt angle of 100° with a projected surface of 30° half angle (see Figure 2 for geometry definition). The aperture, tilt angle, and half angle are sized to account for an unusable edge effect band around the perimeter of the reflector. The RMS shape error of the concentrator will be less than one millimeter with approximately a two milliradian slope error. The RMS shape error and slope errors are based on estimations using a shape-optimized tooling mandrel.

weird plug.

define?

The tilt angle is chosen to maximize energy throughput through the canopy to the absorber/ thruster. Operationally, a tilt angle $\phi=90°$ is most convenient because this makes the concentrator pivot axis (see Figure 2) the same as the symmetry axis of the focused cone of sunlight. However, by tilting the concentrator further back by about 10°, canopy transmission losses can be reduced. Beyond 10°, losses due to not having the pivot and focal-cone axes coincident start to dominate. Therefore, the best performance occurs close to a tilt angle $\phi=100°$ for the IHPRPT Phase I thruster/concentrator system using a CP1 canopy.

The thickness of the CP1 canopy film is thin enough that absorption losses are negligible, even though CP1 is not perfectly transparent. However, reflection losses are physically unavoidable because CP1 has an Index of Refraction larger than that of vacuum or air. Reflection losses become greater with

is this normally capitalized

canopy not identified in figure 2

increasing angle of incidence. From Figure 2 it can be seen that sunlight must transit the canopy, reflect off of the metalized film, transit the canopy again, and then be absorbed in the thruster system. For the $\phi=90^\circ$ case, most sunlight hits the canopy at angles greater than 40°. At angles greater than this, reflection losses begin to grow rapidly.

Increasing the tilt angle will decrease the peak intensity of the focused light and also spread the distribution somewhat. This will cause some light to be lost from the thruster. It is this loss that is traded against the increase of energy due to lower reflection losses. Higher intensities give higher Isp at the expense of higher total energy and thrust.The computer code Offaxis, written specifically for inflatable concentrators, can calculate the losses due to canopy reflections. Figure 6 shows three curves against tilt angle calculated with Offaxis. One curve is intensity at the center of the focused spot (right axis). The other two curves are total power collected for two aperture diameters, 2 inches and 4 inches. Peak intensity can be seen to correspond to a tilt angle of 90 degrees. The 2-inch aperture has peek intensity at about 110 degrees and the 4 inch at 120. It was decided to choose an angle of 100 degrees because it was desirable to maintain Isp. Also, this analysis does not include reradiation losses which increase with increasing tilt angle.

Reference? or was it written for this paper?

cute typo

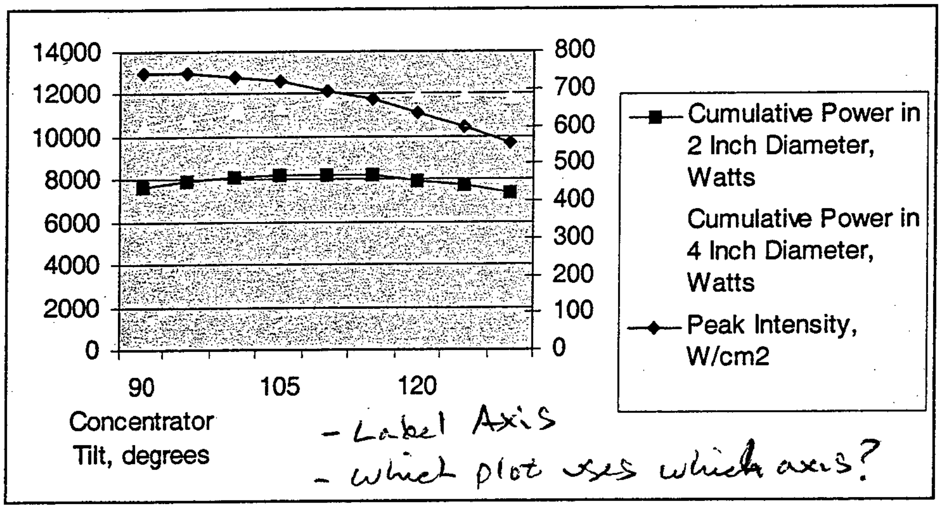

- Label Axis
- which plot uses which axis?

Figure 6. Concentrator Power vs. Tilt Angle

An increase in tilt angle has one other benefit. The eccentricity of the concentrator perimeter is decreased. In this case, it made it possible to get a larger aperture because the major axis was shortened enough to fit the available machine tool. The advantage will also likely be available in future scaled-up concentrators.

The thruster/absorber receiver optics and surfaces ideally should allow entry of light only from angles lying in the cone defined by the concentrator perimeter and the focal point (referred to as the focal cone). Obviously, the same light must enter some the thruster aperture while maintaining the angular constraint. This minimizes reradiation while maximizing energy input, which is equivalent to maximizing the concentration ratio in the design aperture.[5] When the focal cone is tilted off perpendicular the receiver must be designed to absorb a larger solid angle of light. This will leave a gap between the focal cone solid angle and the receiver acceptance solid angle. This gap is a path open to reradiation losses which limits concentration ratio. If θc is the focal-cone half angle and $\Delta\phi$ is the amount the concentrator is tilted back, then the acceptance cone half-angle must be $\theta c+\Delta\phi$ to include all light at any given pivot angle of the concentrator system. For the IHPRPT demonstration hardware this result in an acceptance solid angle that is about 65% greater. However, this is not as bad as it sounds because the current IHPRPT thruster already has a larger acceptance angle and will meet the Isp goals. This is because the absorber temperature is not high enough to result in a large loss. Still, future absorber/thruster receiver performance will be limited by the gap in acceptance solid angle. Future designs could reduce this problem by rotating a part of the receiver optics with the concentrator. This may be attractive anyway because the distribution of light in the focal-cone is not really symmetric. A rotating receiver could have benefit. Alternatively, antireflective coatings could be used to reduce losses or the canopy could be ejected if the reflector film

typo?

than the 90' case?

?

could be rigidized. At any rate, phase II IHPRPT should begin to look at these issues.

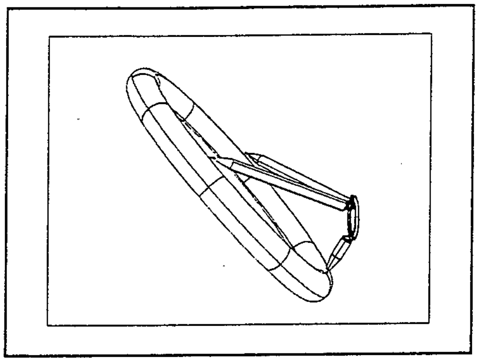

Figure 7. Solid Model of Inflatable Concentrator Support Structure

Inflatable / rigidizable struts will be used to connect the torus and concentrator to the spacecraft interface ring. Figure 7 is a solid model of the support struts and interface base ring. The struts are composed of a resin-impregnated composite fabric sandwiched between thin film polymer skins. The inner skin when inflated is pre-stressed into a known shape. This thin film bladder becomes the male mold for the rigidized structure and the outside skin functions as the female mold. The pre-impregnated composite fabric between the films is compliant to the mold shape during inflation. The resin then cures in the space environment due to both the UV radiation and the absence of oxygen. By using high strength and stiffness fiber materials, a stiff, strong, lightweight structure can be produced. Once the inflated structure becomes rigidized, it no longer requires inflation gas to maintain its rigidity. This feature eliminates the long-term make-up gas requirement for these structures.

need for make up gas not explained

CN-104, a UV curable resin, has been selected. Tensile and compression samples have been prepared using this resin and S glass. Each sample was instrumented with a Micro Measurement biaxial strain gage and tested at 0.05 inches/minute on a uni-drive SATEC universal test machine. All samples were allowed to come to the equilibrium test temperature prior to test. The tensile testing results showed CN 104/ S glass to have a modulus of 2.43 msi @ -40° F, 1.77 msi @ 72° F and 1.19 msi @ 190° F. The compression tests were performed over a wider range of temperatures. The results showed a compression modulus of 4.25 msi @ -40°F, 4.1 msi @ 72°F, 3.45 msi @ 190°F, 3.28 msi @ 220°F, and 3.3 msi @ 250°F.

Can you include the temperature range that your models predict in this discussion?

RAPID PROTOTYPING OF CONTROL SYSTEMS

Thiokol is developing the inflation control system (ICS), sun tracking system, and fine focus system using an advanced rapid prototyping methodology based on an interfaced family of hardware and software tools: I-DEAS for solid modeling, ADAMS for multi-body dynamics, and MATRIXx for control system design (Figure 8).[6]

define 1st

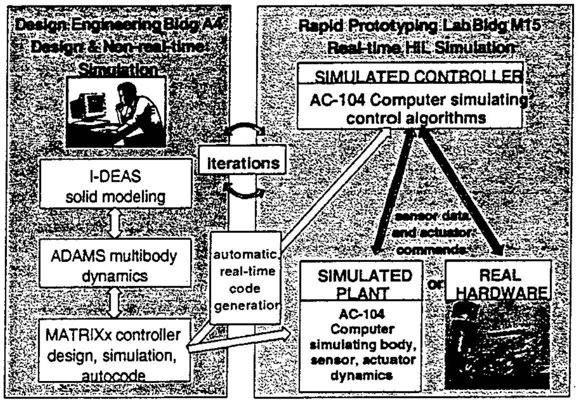
Design Engineering Bldg A4
Design & Non-real-time Simulation
I-DEAS solid modeling
ADAMS multibody dynamics
MATRIXx controller design, simulation, autocode
Iterations
automatic real-time code generation
Rapid Prototyping Lab Bldg M15
Real-time HIL Simulation
SIMULATED CONTROLLER
AC-104 Computer simulating control algorithms
sensor data and actuator commands
SIMULATED PLANT
AC-104 Computer simulating body, sensor, actuator dynamics
or
REAL HARDWARE

Figure 8. Rapid Prototyping System

The advantages of this rapid prototyping approach, sometimes known as "build-a-little, test-a-little," include: 1) virtually no software written by hand, 2) substantial savings of time and money in code generation, 3) short iteration cycles result in early problem identification and solution.

An ICS capable of controlled on-orbit deployment and rigorous management of component inflation pressures is essential for mission success.

A mathematical model of the ICS was created using the SystemBuild feature of MATRIXx. Figures 9, 10, and 11 illustrate 3 levels of hierarchy in the SystemBuild math model of the STP inflation system.

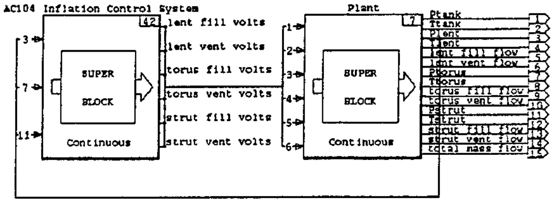
AC104 Inflation Control System
42
SUPER BLOCK
Continuous
3
7
11
lent fill volts
lent vent volts
torus fill volts
torus vent volts
strut fill volts
strut vent volts
Plant
7
SUPER BLOCK
Continuous
1
2
3
4
5
6
Ptank
Ttank
Plent
Tlent
lent fill flow
lent vent flow
Ptorus
Ttorus
torus fill flow
torus vent flow
Pstrut
Tstrut
strut fill flow
strut vent flow
total mass flow

Figure 9. Top-Level Model of STP Inflation System

Figure 9 shows the top-level super-block, consisting of the AC104 computer (functioning as the controller) and the plant (system to be controlled).

Figure 10 is the second level, an expanded view of the plant super-block, which contains the volume filling and venting calculations for the various volumes in the system: supply tank, struts, torus, and lenticular.

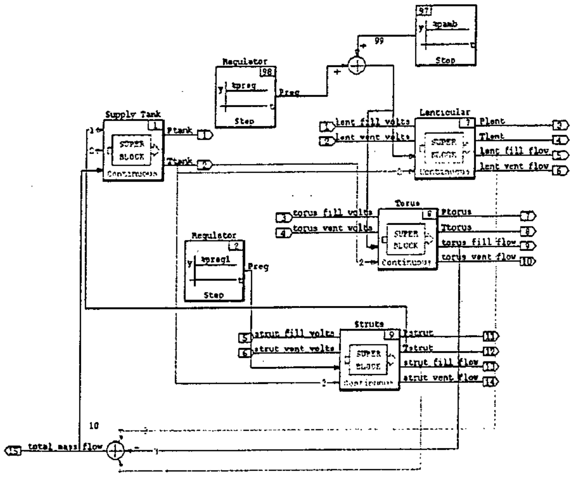
Supply Tank
SUPER BLOCK
Continuous
Ptank
Ttank
Regulator
%preg
Step
Preg
99
%pamb
Step
Lenticular
lent fill volts
lent vent volts
Plent
Tlent
lent fill flow
lent vent flow
Torus
torus fill volts
torus vent volts
Ptorus
Ttorus
torus fill flow
torus vent flow
Regulator
%pregl
Step
Preg
Struts
strut fill volts
strut vent volts
Pstrut
Tstrut
strut fill flow
strut vent flow
10
total mass flow

Figure 10. Plant Model

Figure 11 shows the plant model one level deeper into one of the components, the lenticular. (The torus and strut models are similar.)

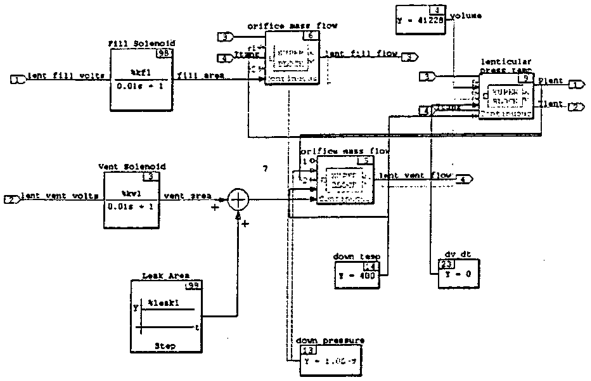
Fill Solenoid
lent fill volts
%kf1
0.01s + 1
fill area
orifice mass flow
lent fill flow
Y = 41228
volume
lenticular press temp
Plent
Tlent
Vent Solenoid
lent vent volts
%kv1
0.01s + 1
vent area
7
orifice mass flow
lent vent flow
Leak Area
%leak1
Step
down temp
Y = 400
dv dt
Y = 0
down pressure

Figure 11. Membrane Concentrator Model

Once this simulation was considered satisfactory, it was run through AutoCode, which automatically converted the graphical model to optimized C code. This code was then compiled, linked, downloaded, and run in real time on the AC-104 Pentium-based PC.

The component models in the plant (valves, struts, torus, lenticular) were gradually replaced with the real hardware. Connections between the real hardware and the simulation program were formed and edited graphically. Rapid iterations to the controller design were made until an acceptable product was achieved. Each iteration, which only takes a few minutes, generally consists of editing the SystemBuild block diagram, converting to C using AutoCode, and then compiling, linking, downloading, and running on the AC-104.[7]

The ICS was successfully used to inflate and regulate TSC-6 during low pressure (5E-5 torr) testing at the NASA Glenn Research Center (GRC) Tank 6 during October 1998. Figure 12 shows a photographic view of TSC-6 in Tank 6.[8] The test included simulated solar flux and cold wall radiation testing. During testing at GRC, only the torus and lenticular were deployed; the struts were rigid and not inflated. The valving, relays, and transducers were located inside the vacuum chamber. The inflation gas supply was provided external to the tank and was hard-plumbed through the chamber wall. The control computer and interactive monitor also remained on the outside of the chamber. The signals of the controller and the responses of the sensors were passed electronically through sealed bulkhead connectors on the chamber wall.

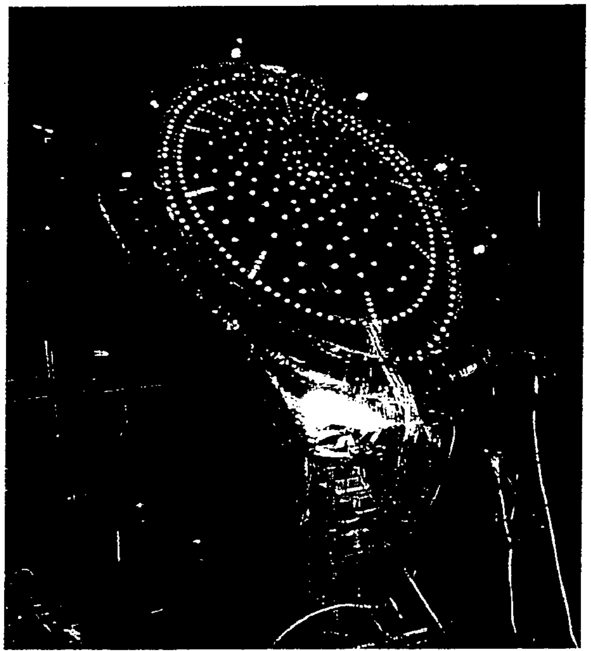

Figure 12. Tsc-6 in NASA GRC Tank 6

upper case?

The first 300 seconds of inflation were used to expand the torus to shape using short (5 millisecond) pulses of nitrogen at a rate of 5.0 Hz. Using such quick pulses keeps the pressure inside the torus quite low and minimizes the effects of violent gas expansion under vacuum. Once the torus had been extended to shape, the pressure was ramped up to the desired 2.0 inches of water pressure. The pulse commands to the lenticular began at 490 seconds. The pulse width was 4.5 milliseconds with a frequency of 3.0 Hz. These pulses continued until

Is this a normal pressure unit used in Solar?

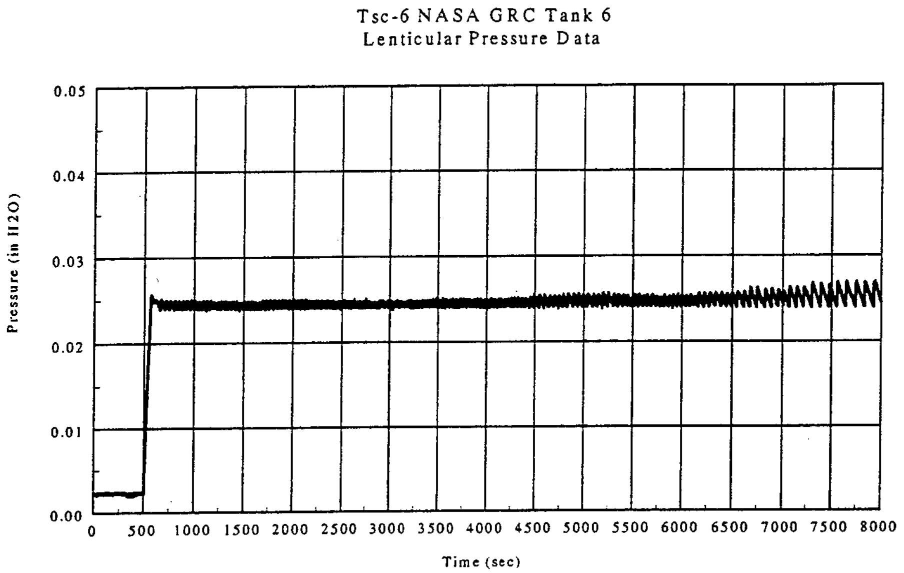

Figure 13. Membrane Concentrator Pressure for First 8000 seconds

the lenticular reached a pressure of 0.02 inches of water pressure. At that pressure the lenticular had expanded to shape, and the controller switched to an inflation mode of 4 millisecond pulses at a frequency of 12 Hz until the lenticular reached a pressure of 0.025 inch of water. Figure13 shows the pressure-time trace of the membrane concentrator for the first 8,000 seconds of the test.

Figure 14 shows a schematic of the membrane concentrator sun tracking/ fine focus concept. This "hexapod" approach is very similar to the motion simulators in amusement parks and consists of a ring that is supported on a turntable by six electric linear actuators. The struts and concentrator are attached to the ring, essentially forming a single body which can be translated and rotated in all six degrees of freedom. The proper rotation of the turntable and the ring focus the rays of the sun to a theoretical focal point, and the translation of the ring puts the focal point in the desired location in the absorber/engine. A pair of sun sensors on the ring provides the necessary feedback for coarse pointing, and flux sensors in the secondary concentrator provide the feedback for the fine focusing. The development of the flux sensors is being addressed under a different program.

are there any aerospace application examples for the "hexapod"?

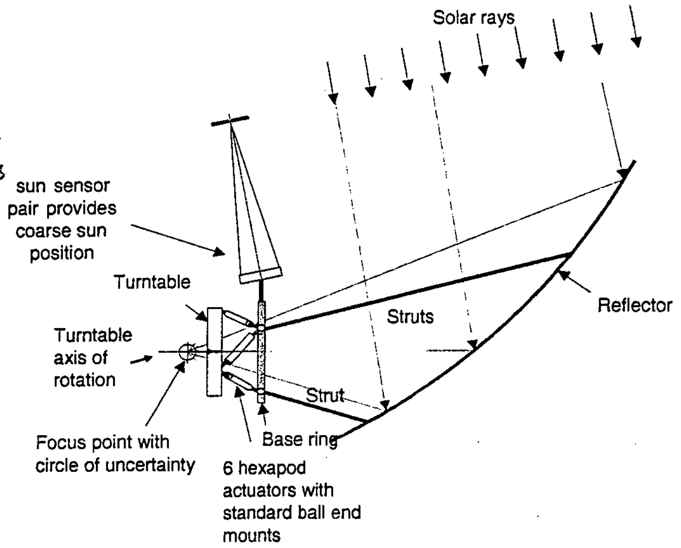
Solar rays
sun sensor pair provides coarse sun position
Turntable
Turntable axis of rotation
Struts
Reflector
Strut
Focus point with circle of uncertainty
Base ring
6 hexapod actuators with standard ball end mounts

Figure 14. Sun Tracking and Fine Focus Concept

~~Does~~ does this have any adverse impact on this program? Do you need this element to complete your program?

defined on page 5

To quantify the actuator and control system requirements, a preliminary dynamic solid model of the concept was created in the ADAMS ~~(Advanced Dynamic Analysis of Mechanical Systems)~~ software with 15 rigid bodies (not including ground). The concentrator struts, mounting plate, and sun sensors were modeled together as a single rigid body supported by six actuators. Each actuator was modeled as two separate rigid bodies. The turntable assembly provided a base for the actuators and was connected to the absorber/engine with a revolute joint to facilitate tracking in the pitch axis. The absorber/engine was connected to ground with a spherical joint to simulate spacecraft attitude control. Three-~~D~~ dimensional marker triads were created to represent the sun vector, ideal focal point in the secondary, and the displaced "focal point" of the concentrator.[9]

Sun sensors are important components of the sun tracking system. The Space Dynamics Laboratory of Utah State University has fabricated two sun sensors that can be used for ground based testing. The sun sensors consist of 2 sensor heads integrated to a dual channel signal processor. They are powered by +28VDC. The average power is 5.6W and is independent of input voltage. These sensors are rated to operate between -25°C to 55°C. The position accuracy is +/- 0.05° using a resolution of 30 °/2048 pixels=0.015 °. The field of view is +/- 15°. The data is buffered and held until clocked out and read by the controller. The instrument will acquire 10 samples per second. The data consists of 5 serial bytes (1 byte status, 4 bytes angle) in IEEE-754 format. Each pixel in the array is pre-set to represent a specific sun angle. The sunlight produces a Gaussian-type illumination pattern on the pixel array. The brightest pixel in the array is used to determine the sun's actual angle. Figure 15 shows the sun sensor subsystem operation.

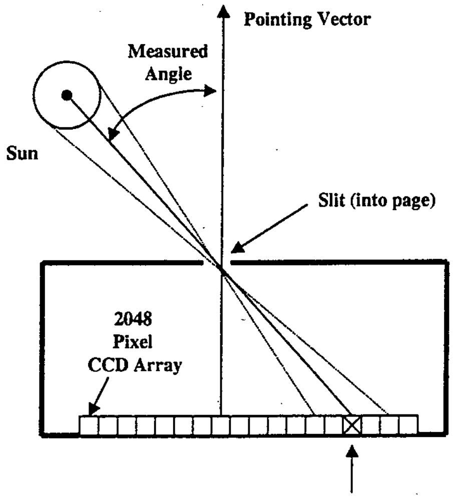

Figure 15. Sun Sensor Subsystem Operation

INTEGRATED SYSTEM DEPLOYMENT

Packaging the membrane concentrator system so that it can be stowed within the launch vehicle and deployed without entanglement on orbit is important to mission success. The proposed membrane concentrator stowage method is optimized for minimal stowage volume and is derived from experimental deployment trials with a 2 X 3 meter class concentrator assembly attached to a mock quarter scale spacecraft. During the deployment trials, four orientations of the spacecraft were tested. Figure 16 shows the deployment sequence photos with the spacecraft positioned in the 90° orientation. The collector and struts were folded in such a way that the loose end of the torus was on the outside of the stowed collector. This was done in an effort to keep the collector from wedging itself between the long struts. This fold pattern worked in all (0°, 45°, 90° and 135°) deployment orientations.

pitch axis?
(vs. ro

MODAL ANALYSIS

A dynamic modal survey of TSC-6 was conducted during August 1999 by NASA~~/MSFC~~ engineers using a laser vibrometer system. The test was at room temperature and ambient pressure. Eighteen modes were identified for 0.022 in. H_2O lenticular pressure and 16 for 0.018 in. H_2O pressure. The test reported frequencies, mode shapes, and damping.

define since
acronym
not used
further
in
docum

The TSC-6 modal analysis was correlated with a NASTRAN model. The objective of this activity was to construct a flexible body model using NASTRAN that could be used to predict the dynamic response of an inflatable solar concentrator. The original correlation was reported with an error in the lenticular Young's modulus. The error was corrected and the model was re-analyzed. The report was updated. Correlation was based upon frequency. Mode shape played into the correlation only moderately. Further correlation was done at Thiokol to catenary, torus and strut modulii that seemed to bring the torus modes more in line with the modal survey results. Measured torus mode frequencies began at 3.7 Hz. The predicted torus frequencies began at 5.3 Hz. The fundamental system frequency was measured at 2.055 Hz and predicted at 2.1 Hz. An AIAA paper of the modal survey was presented by Robert Engberg at the 41st AIAA SMD conference in April of 2000.[10] Lessons learned from this activity include the observation that the modes observed for a membrane concentrator are highly dependent on test conditions. Atmospheric pressure testing has very limited value in predicting the dynamic modes of a membrane concentrator during low pressure (10E-6 torr) operation.

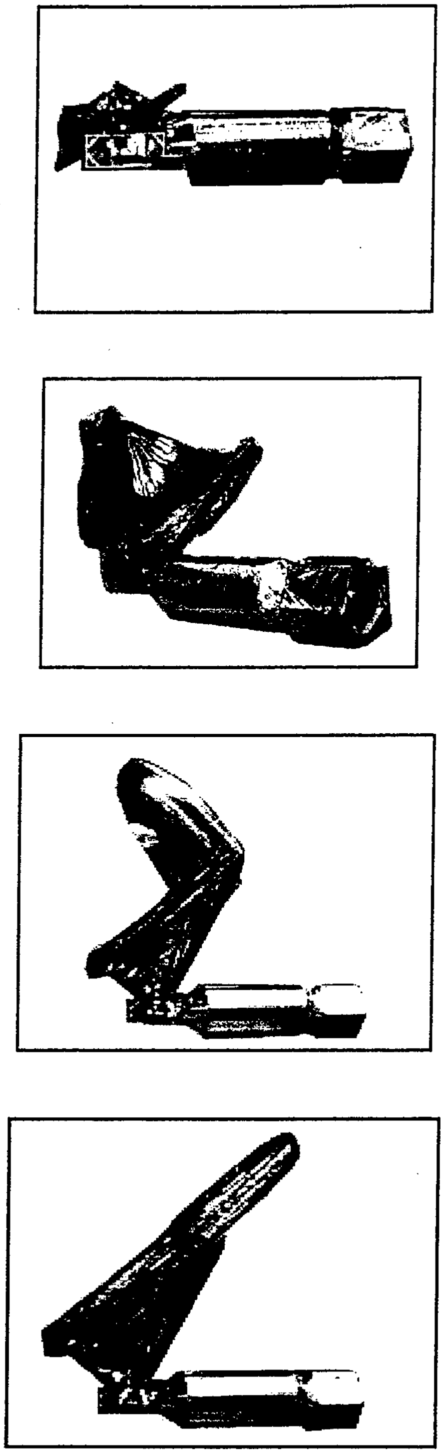

Figure 16. Deployment of 2X3 Meter Concentrator at 90° Orientation.

FUTURE WORK

A series of ground tests are planned for the remainder of the program including integrated test (IT)-4, IT-5, and IT-6, and the final integrated test.

The objectives of IT-4 are to determine packaging and deployment characteristics of a flight-sized (4 X 6 meter) membrane concentrator (FSC-1), and test the inflation control system under atmospheric conditions.

The objectives of IT-5 are to determine characteristics of a flight-sized concentrator (FSC-1), and test the inflation control system in vacuum. The global geometry of the concentrator and support struts will be measured after deployment/rigidization and compared to predicted and measured atmospheric deployments of IT-4.

The objective of IT-6 is to demonstrate in a vacuum environment the effective deployment and strut rigidization of the FSC-2 assembly. FSC-2 will include the flight type reflective surface. The concentrator will be packaged and exposed to simulated launch conditions prior to deployment. The test will include the integrated inflatable components, bus interface (mechanical only), and inflation control system. The global geometry of the deployed structure will be measured and compared to predicted values generated from structural analysis. Optical degradation that occurs during packaging, launch load environments and deployment will be characterized.

The final integrated test will be a culmination of all hardware built and tested under this effort. The integration hardware will include the absorber engine, FSC-2 torus supported concentrator, rigidized struts, bus interface, inflation control, sun tracking system, and focus control system. The absorber engine will be housed in a vacuum test chamber with a quartz window. This is necessary to protect the engine from oxidation during on sun testing.

This final test will demonstrate the solar propulsion system with integrated pointing and tracking system in ground based testing.

CONCLUSIONS

The IHPRPT demonstration program is on schedule as a ground based test bed that will demonstrate the technologies necessary for a successful solar thermal propulsion mission. The rapid prototyping methodology used promises to be relevant to a wide range of control applications for Solar Thermal Propulsion systems.

ACKNOWLEDGMENT

The Air Force Research Laboratory, Edwards Air Force Base, CA sponsored this research. Dr. Michael Holmes is the program manager and his support is gratefully acknowledged. The effort was performed as a part of an IHPRPT Demonstrator program, contract #F04611-97-C-0033. Without Tsc-6 provided by SRS Technologies and the Tank 6 vacuum facility provided by NASA Glenn Research Center, this demonstration would not have happened. Gratitude is also expressed to the test engineers from NASA/MSFC who conducted the modal testing. We wish to acknowledge the personnel of those organizations for their outstanding contributions to this proof-of-concept demonstration.

you are acknowledging one of the authors.

REFERENCES

1 Laug, K,. *The Solar Propulsion Concept is Alive and Well at the Astronautics Laboratory*, AFRL, Edwards Air Force Base CA, JANNAF Propulsion Meeting, Cleveland OH, May 1989.

This is not the correct format for referencing a paper

2 Kennedy F., Jacox M., *Mission Applications of an Integrated Solar Upperstage (ISUS).* ASME paper AP0401, 1995

3. Illustration provided by M. R. Holmes Air Force Research Laboratory, Edwards Air Force Base, CA, 1999

I don't think you need to reference this since it comes from Mike, an author.

4. Perkins

I know you are working on getting this reference

5. Welford W. T., Winston R., *The Optics of Nonimaging Concentrators*, ISBN 0-12-745350-4, Academic Press, 1978.

6. MATRIX x is software of Wind River Systems Inc.

7. Lester D. M., Wassom S. R., Hancey B. D., and Siefkas P. L., *Solar Concentrator Inflation Control System*, AIAA2000-1571, April 2000.

8. Lester D., *Summary Report Torus Supported Solar Concentrator (Tsc-6) Testing in LeRC Tank 6*, TR11707, Thiokol Propulsion, UT, July 1999.

These are all caps in the paper.

9. Wassom S. R., *Focus Control System for Solar Thermal Propulsion*, 2000 International ADAMS User Conference, Orlando FL, June 2000.

10. Engberg R. C., et. al., *Modal Survey Test of the SOTV 2X3 Meter Off-Axis Inflatable Concentrator*, AIAA 2000-1639, April 2000.